THIS DRAWING AN[illegible]RMATION THEREIN, FOR WHICH THERE MAY BE PATENT APPLICATIONS PENDING, ARE THE[illegible] PROPRIETARY PROPERTY OF BARBCO INC. ANY COPY OF THE DRAWING IS ISSUED ONLY BY C[illegible]T OF A BARBCO OFFICER, SHALL BE RETAINED IN CONFIDENCE, AND SHALL NOT BE COPIED, REPRODUCED OR DISCLOSED TO OUTSIDE PARTIES, AND ONLY MAY BE USED WITH REFERENCE TO THE CONTRACT, PROPOSALS OR PRODUCTS OF BARBCO INC. NOTHING DISCLOSED IN THE DRAWING NOT PUBLICALLY AVAILABLE MAY BE USED EXCEPT WITH WRITTEN PERMISSION, AND ALL COPIES SHALL BE RETURNED UPON REQUEST.

REVISIONS			
REV.	DESCRIPTION	[illegible]	APPROVED
A	REVISED 16530-041 & 16530-042	4/21/2021	MRH

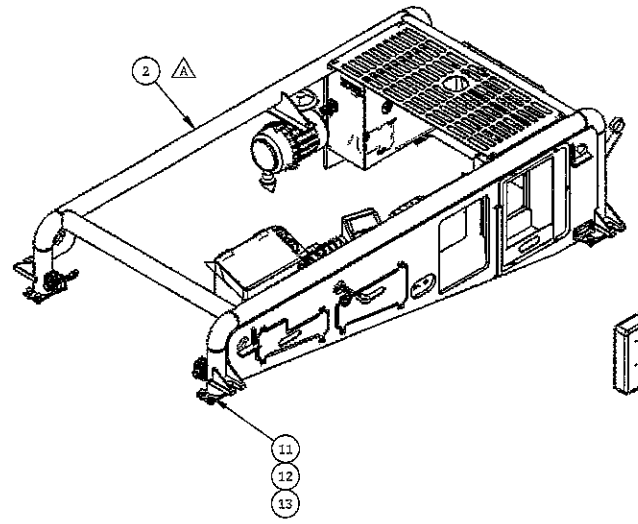

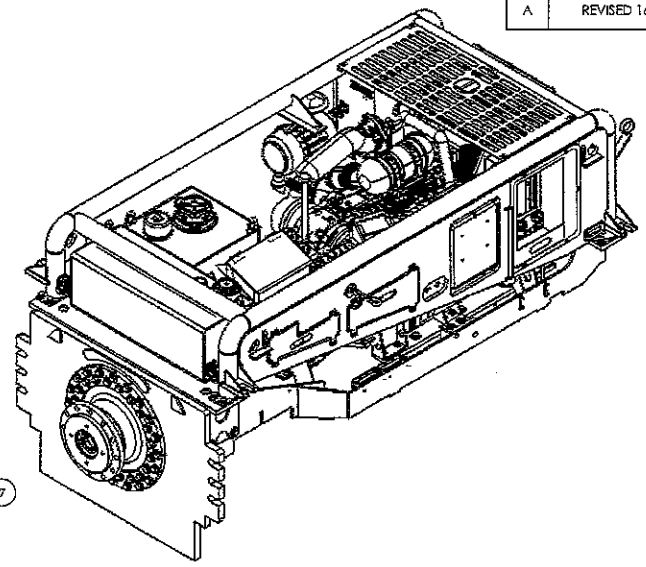

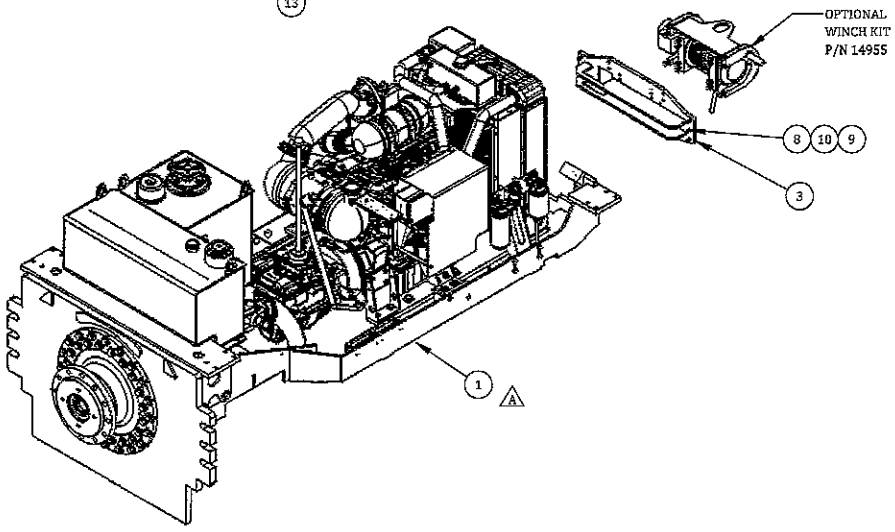

ITEM NO.	PART NUMBER	DESCRIPTION	QTY.
14	15422-1039		1
13	90342-003	FLAT WASHER, 3/4" NARROW (SAE) GR8 ZP	16
12	90342-001	LOCK WASHER, 3/4" REG	16
11	90340-011	HEX HEAD SCREW, 3/4-10UNC, 1 1/2" LG., GR8 ZP	16
10	90282-008	FLAT WASHER, 1/2" SAE GR8 ZP	6
9	90282-004	LOCK WASHER, 1/2" REG, ZP	6
8	90280-007	HEX HEAD SCREW, 1/2-13UNC, 2" LG., GR8	6
7	90202-003	FLAT WASHER, 1/4" SAE GR8 ZP	4
6	90202-002	LOCK WASHER, 1/4" GEN. PURPOSE, ZP	4
5	90200-001	HEX HEAD SCREW, 1/4-20UNC, 3/4" LG., GR8	4
4	7920034	MANUAL PAK	1
3	15529-059	PIPE RACK WINCH PLATE WELDMENT	1
2	16530-042	PIPE RACK ASSEMBLY	1
1	16530-041	SUB FRAME ASSEMBLY	1

UNLESS OTHERWISE SPECIFIED DIMENSIONS ARE IN INCHES

TOLERANCES

FRACTIONS	DECIMALS	ANGLES
± 1/32"	.XX ± .030	± .5°
	.XXX ± .005	

APPROVAL	
DESIGNED:	DWN
DRAWN:	DWN
CHECKED:	DWN
DATE:	1/25/2021

MATERIAL
SEE BOM

ACTUAL WEIGHT (LBS.) -

SURFACE FINISH -

DO NOT SCALE DRAWING

CAD GENERATED DRAWING
DO NOT MANUALLY UPDATE

Barbco Inc.
315 Pekin Drive SE
East Canton, Ohio 44730
Manufacturing Horizontal Earth Boring Machines
Tunnel Equipment - Directional Drills - Tooling

POWER PACK ASSEMBLY
-
36-650 ABM, T4

THIRD ANGLE PROJECTION

SIZE B | DWG. NO. 16530-040 | REV. A

SCALE: 1:24 | CAD FILE: 16530-040 | SHEET: 1 OF 1

THIS DRAWING ANI RMATION THEREIN, FOR WHICH THERE MAY BE PATENT APPLICATIONS PENDING, ARE THE PROPRIETARY PROPERTY OF BARBCO INC. ANY COPY OF THE DRAWING IS ISSUED ONLY BY OF A BARBCO OFFICER, SHALL BE RETAINED IN CONFIDENCE, AND SHALL NOT BE COPIED, REP ED OR DISCLOSED TO OUTSIDE PARTIES, AND ONLY MAY BE USED WITH REFERENCE TO THE CONTRACT, PROPOSALS OR PRODUCTS OF BARBCO INC. NOTHING DISCLOSED IN THE DRAWING NOT PUBLICALLY AVAILABLE MAY BE USED EXCEPT WITH WRITTEN PERMISSION, AND ALL COPIES SHALL BE RETURNED UPON REQUEST.

REVISIONS

REV.	DESCRIPTION	DATE	APPROVED
A	ADDED 16530-466 & 16550-552, 16530-076 REPLACED 16530-074, REVISED 16530-071, 1040149	4/20/2021	DWN
B	16530-057 REPLACED 16530-071, 16530-058 REPLACED 1040149. 16530-043 WAS REVISED.	6/11/2021	DWN

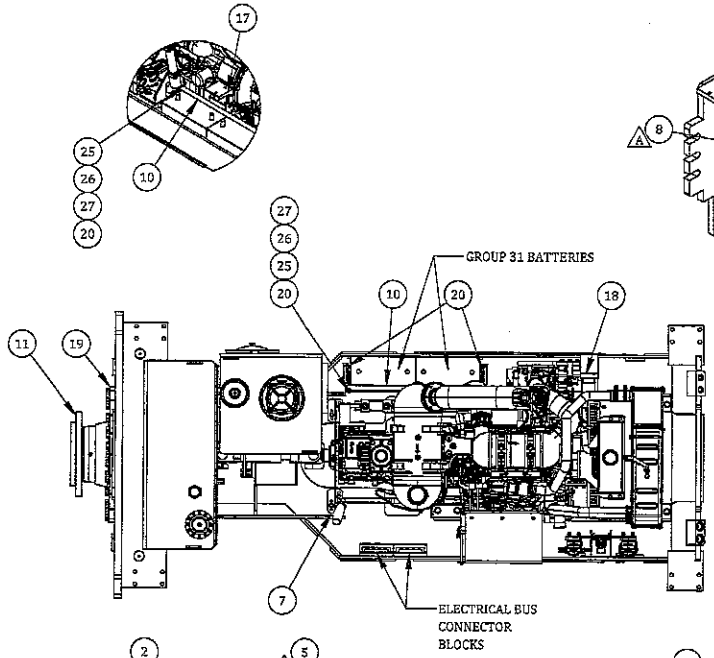

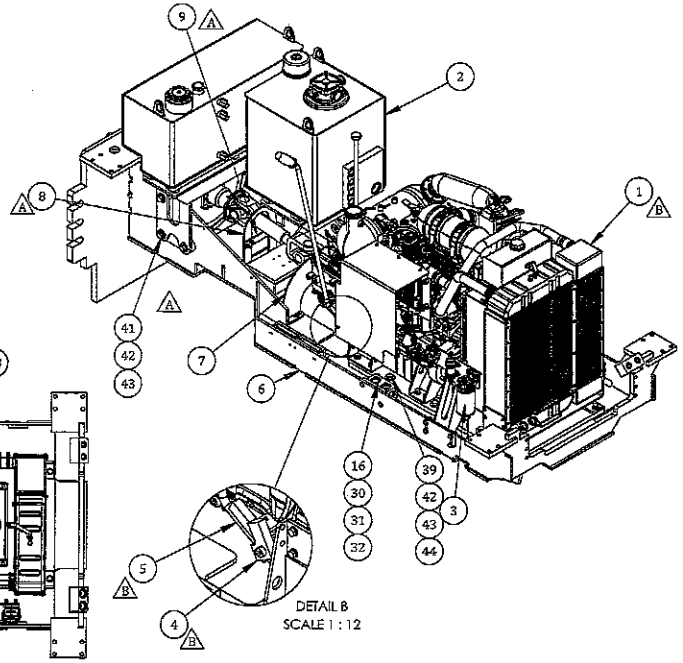

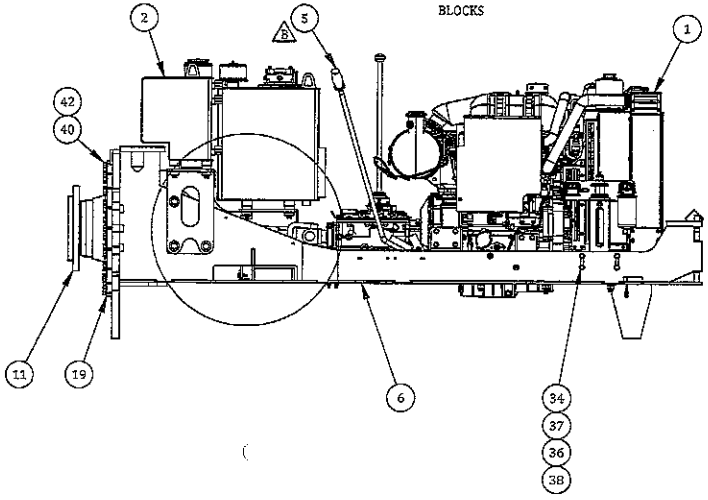

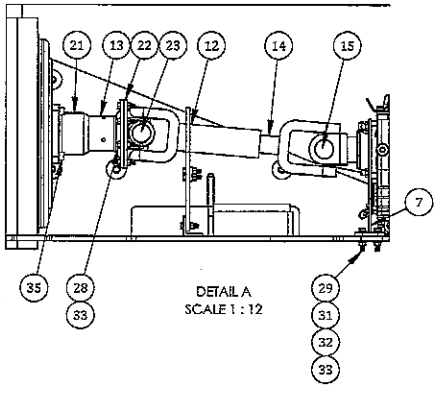

ITEM NO.	PART NUMBER	DESCRIPTION	QTY.
44	90343-001	HEX NUT, 3/4-10UNC, GR8	6
43	90342-002	FLAT WASHER, 3/4" REG. [USS] GR8 ZP	59
42	90342-001	LOCK WASHER, 3/4" REG	53
41	90340-014	HEX HEAD SCREW, 3/4-10UNC, 2" LG., GR8 ZP	7
40	90340-003	HEX HEAD SCREW, 3/4-10UNC, 2 1/2" LG., GR8 ZP	40
39	90340-002	HEX HEAD SCREW, 3/4-10UNC, 3" LG., GR8 ZP	6
38	90283-001	HEX NUT, 1/2-13 GR8	4
37	90282-008	FLAT WASHER, 1/2" SAE GR8 ZP	8
36	90282-004	LOCK WASHER, 1/2" REG, ZP	4
35	90281-001	SOCKET HEAD SCREW, 1/2-13UNC, 2" LG., GR8	4
34	90280-001	HEX HEAD SCREW, 1/2-13UNC, 1 1/2" LG., GR8	4
33	90243-002	HEX NUT, 3/8-16 GR8	20
32	90242-002	FLAT WASHER, 3/8" USS GR8 ZP	10
31	90242-001	LOCK WASHER, 3/8" REG, ZP	14
30	90240-012	HEX HEAD SCREW, 3/8-16UNC, 4" LG., GR8	2
29	90240-003	HEX HEAD SCREW, 3/8-16UNC, 2" LG., GR8	4
28	90240-002	HEX HEAD SCREW, 3/8-16UNC, 1 1/2" LG., GR8	16
27	90203-002	HEX NUT, 1/4-20, GR8, ZP	2
26	90202-002	LOCK WASHER, 1/4" GEN. PURPOSE, ZP	2
25	90202-001	FLAT WASHER, 1/4" GEN. PURPOSE GR8 ZP	2
24	9110012	COLLAR; 1-PC.; CLAMP-ON	1
23	7050230	YOKE CROSS	1
22	7050228	YOKE GEARBOX	1
21	7050033	SHAFT/ ADAPTER ASSEMBLY	1
20	2170026	BATTERY HOLD DOWN BAR	2
19	2000869	GEARBOX RING	1
18	15995-065	BELT PULLY SHROUD WELDMENT	1
17	15995-064	DUMP VALVE MOUNT WELDMENT	1
16	15878-100	DUAL PUMP MANIFOLD	1
15	15523-170	YOKE CROSS	1
14	15523-130	SPICER YOKE SHAFT (1610 SERIES)	1
13	15523-119	COMPANION FLANGE	1
12	15523-118	SPICER SLIP YOKE	1
11	1020074	#20 GEAR BOX PLUG INSTALLATION	1
10	11992	BATTERY HOLD DOWN	1
9	16550-552	DRIVE SHAFT SUPPORT	1
8	16530-466	DRIVE SHAFT GUARD	1
7	16530-076	TRANSMISSION SUPPORT WELDMENT	2
6	16530-060	SUB FRAME WELDMENT	1
5	16530-058	CLUTCH HANDLE ASSEMBLY	1
4	16530-057	CLUTCH LEVER STANDOFF ASSEMBLY	1
3	16530-049	FUEL FILTRATION MOUNT ASSEMBLY	1
2	16530-044	PP TANK ASSEMBLY	1
1	16530-043	3.6 L DEUTZ ENGINE/TRANSMISSION ASSEMBLY	1

UNLESS OTHERWISE SPECIFIED DIMENSIONS ARE IN INCHES

TOLERANCES
FRACTIONS ± 1/32" DECIMALS .XX ± .030 .XXX ± .005 ANGLES ± .5°

MATERIAL: SEE BOM

ACTUAL WEIGHT (LBS.): 5679.615

SURFACE FINISH: -

DO NOT SCALE DRAWING

CAD GENERATED DRAWING DO NOT MANUALLY UPDATE

APPROVAL
DESIGNED: DWN
DRAWN: DWN
CHECKED: DWN
DATE: 01/25/2021

Barbco Inc.
315 Pekin Drive SE
East Canton, Ohio 44730
Manufacturing Horizontal Earth Boring Machines
Tunnel Equipment - Directional Drills - Tooling

SUB FRAME ASSEMBLY
-
36-650 ABM, T4

THIRD ANGLE PROJECTION | SIZE B | DWG. NO. 16530-041 | REV. B
SCALE 1:24 | CAD FILE: 16530-041 | SHEET: 1 OF 1

THIS DRAWING AND [illegible] MATION THEREIN, FOR WHICH THERE MAY BE PATENT APPLICATIONS PENDING, ARE THE [illegible] PROPRIETARY PROPERTY OF BARBCO INC. ANY COPY OF THE DRAWING IS ISSUED ONLY BY [illegible] OF A BARBCO OFFICER, SHALL BE RETAINED IN CONFIDENCE, AND SHALL NOT BE COPIED, REP[illegible] ED OR DISCLOSED TO OUTSIDE PARTIES, AND ONLY MAY BE USED WITH REFERENCE TO THE CONTRACT, PROPOSALS OR PRODUCTS OF BARBCO INC. NOTHING DISCLOSED IN THE DRAWING NOT PUBLICALLY AVAILABLE MAY BE USED EXCEPT WITH WRITTEN PERMISSION, AND ALL COPIES SHALL BE RETURNED UPON REQUEST.

REVISIONS			
REV.	DESCRIPTION	DATE	APPROVED
A	ADDED 15705-100 INTO MODEL	6/16/2021	MRH
B	ADDE D 16530-087	4/20/2022	MRH

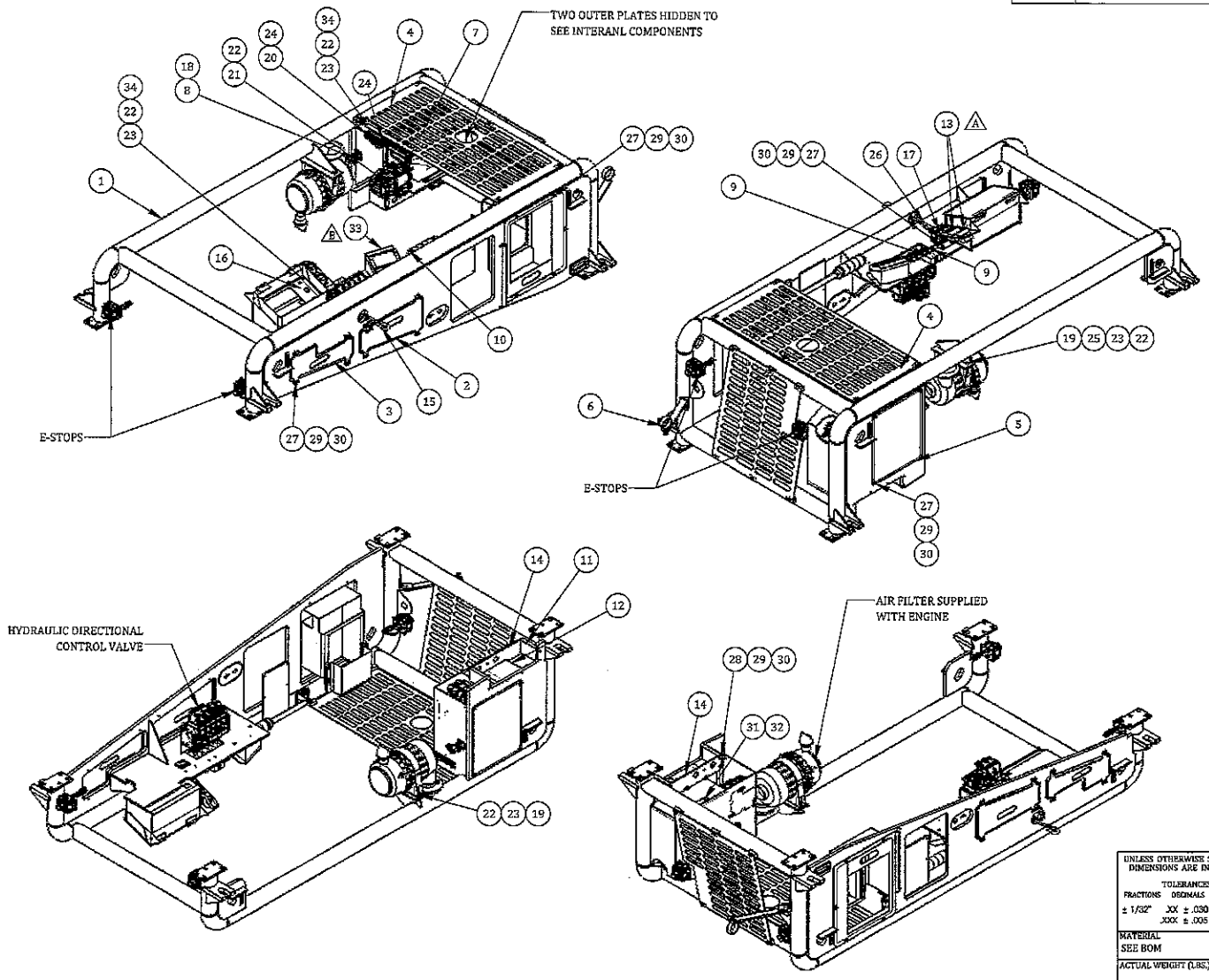

ITEM NO.	PART NUMBER	DESCRIPTION	QTY.
34	90200-001	HEX HEAD SCREW, 1/4-20UNC, 3/4" LG., GR8	8
33	16530-087	DM430 SCREEM ASSEMBLY	1
32	90582-003	FLAT WASHER, 8MM" ZP	4
31	90580-001	HEX HEAD SCREW, 8x1.25, 20MM LG/THREAD LOCK	4
30	90242-002	FLAT WASHER, 3/8" USS GR8 ZP	25
29	90242-001	LOCK WASHER, 3/8" REG, ZP	25
28	90240-019	HEX HEAD SCREW, 3/8-16UNC, 6" LG., GR8	6
27	90240-001	HEX HEAD SCREW, 3/8-16UNC, 1" LG., GR8	19
26	90209-052	OVAL THREADED CONNECTING LINK SS	1
25	90203-002	HEX NUT, 1/4-20, GR8, ZP	2
24	90202-003	FLAT WASHER, 1/4" SAE GR8 ZP	4
23	90202-002	LOCK WASHER, 1/4" GEN. PURPOSE, ZP	10
22	90202-001	FLAT WASHER, 1/4" GEN. PURPOSE GR8 ZP	13
21	90200-010	HEX HEAD SCREW, 1/4-20UNC, 3.5" LG., GR8	3
20	90200-004	HEX HEAD SCREW, 1/4-20UNC, 1" LG., GR8	4
19	90200-002	HEX HEAD SCREW, 1/4-20UNC, 1 1/2" LG., GR8	2
18	90061-003	SOCKET HEAD SCREW, #8-36UNC, 1" LG.	4
17	16550-075	E-STOP MOUNT	1
16	16359-100	CONTROL PANEL SCREEN MOUNT	1
15	16209-065	PULL SWITCH LANYARD ASSEMBLY	1
14	15995-313	PF 500 HEADER PLATE	1
13	15705-100	DIAL GAUGE	2
12	15530-597	PF500 HEADER PLATE SPACER	1
11	15530-596	PF500 HEADER PLATE SPACER	2
10	15530-032	LIGHT BAR ASSY.	1
9	15529-069	THRUST HANDLE LIMITER ASSEMBLY	1
8	15523-154	DEF TANK COOLANT VALVE	1
7	15523-153	DEF PUMP	1
6	1020024	HOSE SUPPORT WELDMENT/ASS'Y	1
5	16530-449	DEF ENCLOSURE SIDE COVER	1
4	16530-448	DEF ENCLOSURE TOP COVER	1
3	16530-415	SIDE COVER PLATE 2	1
2	16530-414	SIDE COVER PLATE 1	1
1	16530-066	PIPE RACK WELDMENT	1

UNLESS OTHERWISE SPECIFIED DIMENSIONS ARE IN INCHES

TOLERANCES
FRACTIONS ± 1/32" DECIMALS .XX ± .030 .XXX ± .005 ANGLES ± .5°

APPROVAL
DESIGNED: DWN
DRAWN: DWN
CHECKED: DWN
DATE: 01/23/2021

MATERIAL
SEE BOM

ACTUAL WEIGHT (LBS.)
SURFACE FINISH
-

DO NOT SCALE DRAWING
CAD GENERATED DRAWING DO NOT MANUALLY UPDATE

Barbco Inc.
315 Pekin Drive SE
East Canton, Ohio 44730
Manufacturing Horizontal Earth Boring Machines
Tunnel Equipment - Directional Drills - Tooling

PIPE RACK ASSEMBLY
-
36-650 ABM, T4

THIRD ANGLE PROJECTION
SIZE B
DWG. NO. 16530-042
REV. B
SCALE 1:24
CAD FILE: 16530-042
SHEET: 1 OF 1

THIS DRAWING ANT [illegible] RMATION THEREIN, FOR WHICH THERE MAY BE PATENT APPLICATIONS PENDING, ARE THE [illegible] PROPRIETARY PROPERTY OF BARBCO INC. ANY COPY OF THE DRAWING IS ISSUED ONLY BY [illegible] OF A BARBCO OFFICER, SHALL BE RETAINED IN CONFIDENCE, AND SHALL NOT BE COPIED, REP[illegible]ED OR DISCLOSED TO OUTSIDE PARTIES, AND ONLY MAY BE USED WITH REFERENCE TO THE CONTRACT, PROPOSALS OR PRODUCTS OF BARBCO INC. NOTHING DISCLOSED IN THE DRAWING NOT PUBLICALLY AVAILABLE MAY BE USED EXCEPT WITH WRITTEN PERMISSION, AND ALL COPIES SHALL BE RETURNED UPON REQUEST.

REVISIONS

REV.	DESCRIPTION	DATE	APPROVED
A	REMOVED 16530-067, 1040144 & 7110012. ADDED 16530-051, -501, -504, -5[illegible], 7050107, 7050135, 90189-003 & 90240-011. SORTED CLUTCH VERIFICATION NOTE. ADDED DETAIL VIEWS E & F.	6/11/2021	DWN
B	REMOVED (1x) 16530-072, (1x) 16530-445, (1x) 90240-016, (2x) 90242-002, (1x) 90243-002. ADDED (1x) 16530-525	10/1/2021	JLS

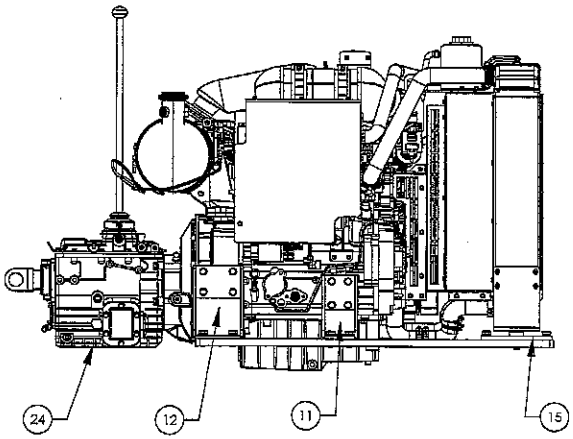

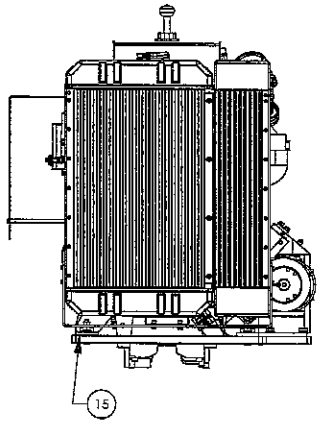

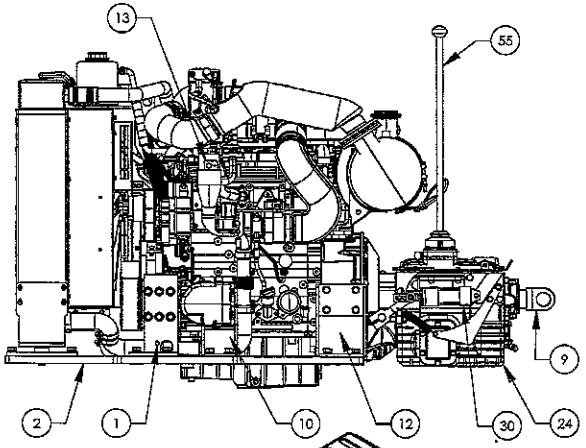

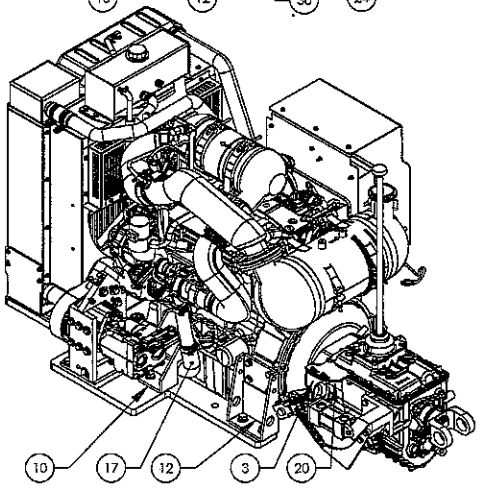

ITEM NO.	PART NUMBER	DESCRIPTION	QTY.
28	7050065	CLUTCH PRESSURE PLATE ASSEMBLY	1
27	7020021	62065S FLYWHEEL PILOT BEARING (NOT SHOWN)	1
26	7020020	CLUTCH THROWOUT BEARING	1
25	7000043-1	TRANSMISSION YOKE	1
24	7000043	FS4205A 5-SPEED TRANSMISSION	1
23	2180197	CYLINDER ROD CLEVIS	1
22	2170479	1"Dia. x 9.63"Lg.; CLUTCH SHAFT	1
21	2170221	1"Dia. x 9.63"Lg.; CLUTCH SHAFT	1
20	2003368	MOUNT; TRANSMISSION TOP; HYDRAULIC CLUTCH	1
19	15995-474	EXHAUST TUBE 8" LONG	2
18	15995-473	EXHAUST TUBE 1 3/8" LONG	4
17	15995-472	SIL. ELBOW, 1.75ID x 4" LEGS, R2"	6
16	15995-363	3.6L DEUTZ DSL ENGINE CRANK ADAP. SHAFT	1
15	15995-269	RADIATOR MOUNT BAR	2
14	15995-110	ENGINE CONTROL MODULES MOUNT ASSY.	1
13	15995-088	AIR TEMP SENSOR MOUNT TUBE WELDMENT	1
12	15995-053	REAR ENGINE SUPPORT WELDMENT	2
11	15995-052	FRONT ENGINE SUPPORT WELDMENT	1
10	15995-051	FRONT ENGINE SUPPORT WELDMENT	1
9	15523-176	EATON FS4205 END YOKE, 1.75-10, 1610	1
8	15523-139	FLAT DRIVE BELT, 55MM-14M, 1400 LNG	1
7	15523-138	QD BUSHING, SF 1.500 BORE	1
6	15523-137	HIGH TORQUE DRIVE BELT SPROCKET, 38TOOTH	1
5	15523-128	DEUTZ 3.6L ENGINE TIER 4	1
4	15523-004	FLYWHEEL, 13" CLUTCH, DTZ 3.6L T4	1
3	1040146	SENSOR BRACKET WELDMENT	1
2	16530-423	ENGINE MOUNT PLATE	1
1	16530-048	PUMP MOUNT ASSEMBLY, DEUTZ 3.6L W/ BELT	1

ITEM NO.	PART NUMBER	DESCRIPTION	QTY.
55	16530-525	SHIFT LEVER	1
54	7050063	CLUTCH DISK; 13"	1
53	7050069	HOUSING; THROW-OUT BEARING	1
52	7050135	TENSION SPRING	2
51	16530-515	TRANSMISSION YOKE STOP BLOCK	1
50	16530-504	CLUTCH SHAFT PULL BACK SPRING MOUNT	1
49	16530-501	CLUTCH HYD. CYL. MOUNT BLOCK	1
48	16530-051		1
47	90622-003	FLAT WASHER, 12MM, 10.9	16
46	90622-002	LOCK WASHER, 12MM GEN. PURPOSE	16
45	90620-003	HEX HEAD SCREW, M12-1.75, 30MM LG., 10.9	19
44	90489-004	HOSE CLAMP, 1 3/4" ID HOSE	14
43	90322-003	FLAT WASHER, 5/8" SAE GR8 ZP	16
42	90322-001	LOCK WASHER, 5/8" REG	16
41	90320-007	HEX HEAD SCREW, 5/8-11UNC, 1 3/4" LG., GR8	16
40	90283-001	HEX NUT, 1/2-13 GR8	2
39	90282-005	FLAT WASHER, 1/2" USS GR8 ZP	1
38	90280-003	HEX HEAD SCREW, 1/2-13UNC, 2-1/4" LG., GR8	1
37	90242-002	FLAT WASHER, 3/8" USS GR8 ZP	4
36	90240-011	HEX HEAD SCREW, 3/8-16UNC, 1 1/4" LG., GR8	2
35	90203-002	HEX NUT, 1/4-20, GR8, ZP	3
34	90202-002	LOCK WASHER, 1/4" GEN. PURPOSE, ZP	2
33	90202-001	FLAT WASHER, 1/4" GEN. PURPOSE GR8 ZP	4
32	90200-004	HEX HEAD SCREW, 1/4-20UNC, 1" LG., GR8	3
31	90189-003	1/8" GREASE FITTING (ZERK) STRAIGHT	1
30	7110047	CYL.: HYD.; 1.5" BORE x 5/8" ROD x 1 1/2" STROKE	1
29	7050107	6" EXTENSION SPRING	1

UNLESS OTHERWISE SPECIFIED DIMENSIONS ARE IN INCHES

TOLERANCES

FRACTIONS	DECIMALS	ANGLES
± 1/32"	.XX ± .030	± .5°
	.XXX ± .005	

MATERIAL
SEE BOM

ACTUAL WEIGHT (LBS.): -

SURFACE FINISH: -

DO NOT SCALE DRAWING

CAD GENERATED DRAWING
DO NOT MANUALLY UPDATE

APPROVAL

DESIGNED:	DWN
DRAWN:	DWN
CHECKED:	DWN
DATE:	01/23/2021

Barbco Inc.
315 Pekin Drive SE
East Canton, Ohio 44730

Manufacturing Horizontal Earth Boring Machines
Tunnel Equipment - Directional Drills - Tooling

3.6 L. DEUTZ ENGINE/TRANSMISSION ASSEMBLY
-
36-700 ABM, T4

THIRD ANGLE PROJECTION

SIZE: B | DWG. NO.: 16530-043 | REV.: B

SCALE: 1:16 | CAD FILE: 16530-043 | SHEET: 1 OF 2

THIS DRAWING ANT [illegible] MATION THEREIN, FOR WHICH THERE MAY BE PATENT APPLICATIONS PENDING, ARE THE [illegible] PROPRIETARY PROPERTY OF BARBCO INC. ANY COPY OF THE DRAWING IS ISSUED ONLY BY A [illegible] OF A BARBCO OFFICER, SHALL BE RETAINED IN CONFIDENCE, AND SHALL NOT BE COPIED, REP[illegible]ED OR DISCLOSED TO OUTSIDE PARTIES, AND ONLY MAY BE USED WITH REFERENCE TO THE CONTRACT, PROPOSALS OR PRODUCTS OF BARBCO INC. NOTHING DISCLOSED IN THE DRAWING NOT PUBLICALLY AVAILABLE MAY BE USED EXCEPT WITH WRITTEN PERMISSION, AND ALL COPIES SHALL BE RETURNED UPON REQUEST.

REVISIONS			
REV.	DESCRIPTION		APPROVED
-	See Sheet1	-	-

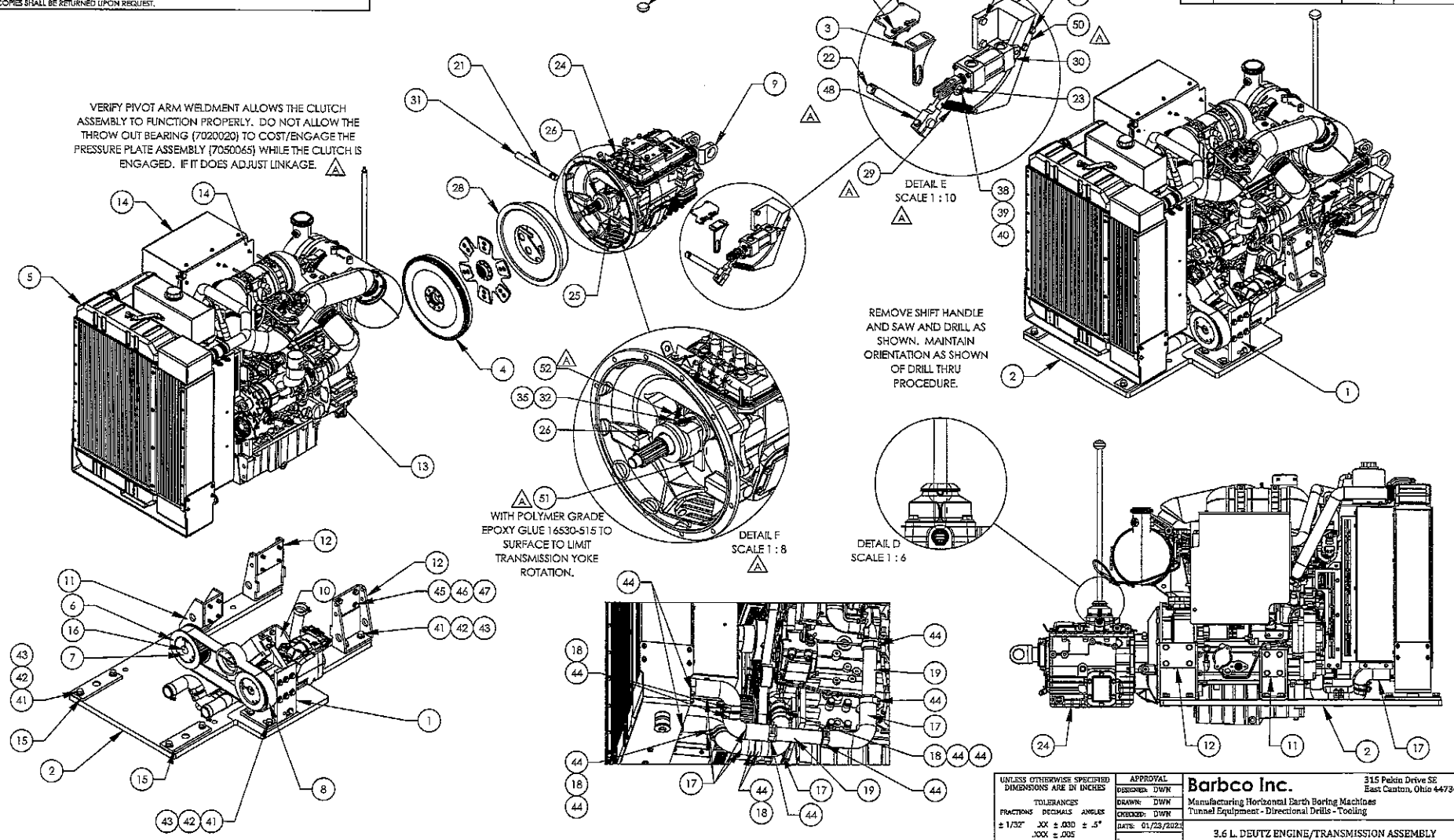

UNLESS OTHERWISE SPECIFIED DIMENSIONS ARE IN INCHES	APPROVAL	Barbco Inc.	315 Pekin Drive SE East Canton, Ohio 44730
TOLERANCES FRACTIONS ± 1/32" DECIMALS .XX ± .030 .XXX ± .005 ANGLES ± .5°	DESIGNED: DWN DRAWN: DWN CHECKED: DWN DATE: 01/23/2021	Manufacturing Horizontal Earth Boring Machines Tunnel Equipment - Directional Drills - Tooling	
MATERIAL SEE BOM		3.6 L. DEUTZ ENGINE/TRANSMISSION ASSEMBLY - 36-700 ABM, T4	
ACTUAL WEIGHT (LBS.)	SURFACE FINISH -	THIRD ANGLE PROJECTION	SIZE B / DWG. NO. 16530-043 / REV. B
DO NOT SCALE DRAWING	CAD GENERATED DRAWING DO NOT MANUALLY UPDATE	SCALE 1:16	CAD FILE: 16530-043 / SHEET: 2 OF 2

THIS DRAWING AND MATION THEREIN, FOR WHICH THERE MAY BE PATENT APPLICATIONS PENDING, ARE THE PROPRIETARY PROPERTY OF BARBCO INC. ANY COPY OF THE DRAWING IS ISSUED ONLY BY C. A BARBCO OFFICER, SHALL BE RETAINED IN CONFIDENCE, AND SHALL NOT BE COPIED, REPR. OR DISCLOSED TO OUTSIDE PARTIES, AND ONLY MAY BE USED WITH REFERENCE TO THE CONTRACT, PROPOSALS OR PRODUCTS OF BARBCO INC. NOTHING DISCLOSED IN THE DRAWING NOT PUBLICALLY AVAILABLE MAY BE USED EXCEPT WITH WRITTEN PERMISSION, AND ALL COPIES SHALL BE RETURNED UPON REQUEST.

REVISIONS			
REV.	DESCRIPTION	L	APPROVED

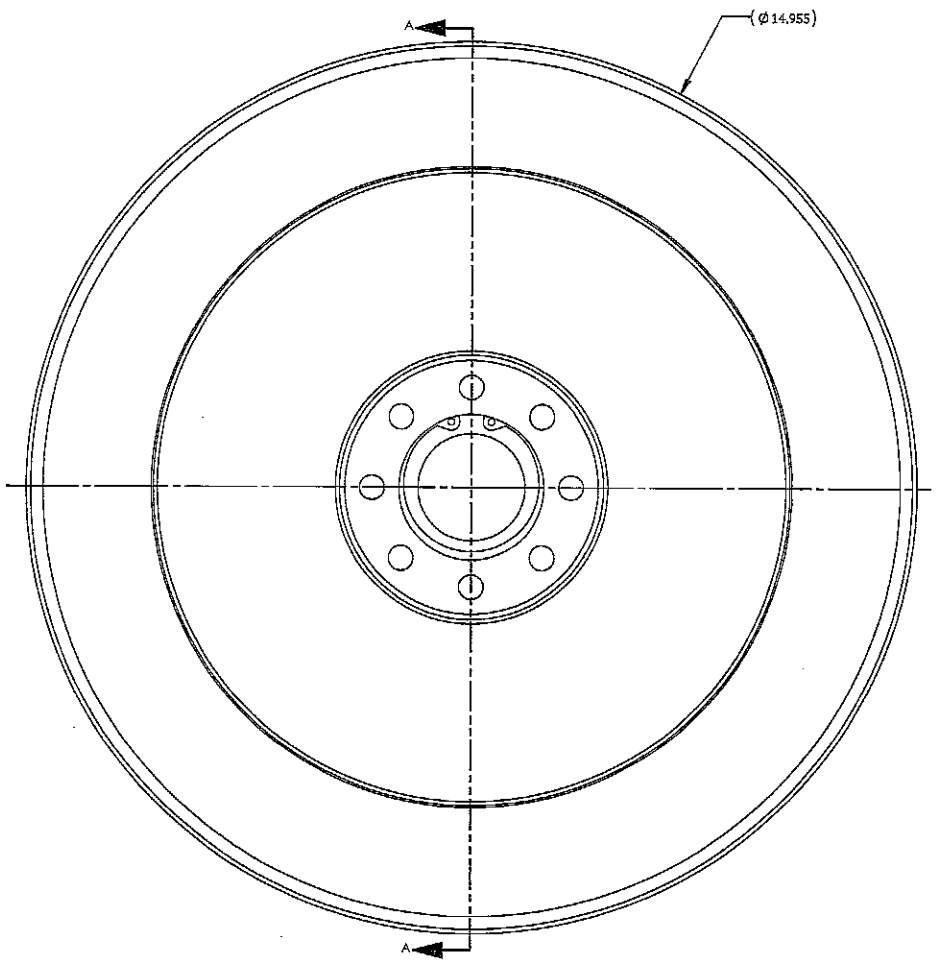

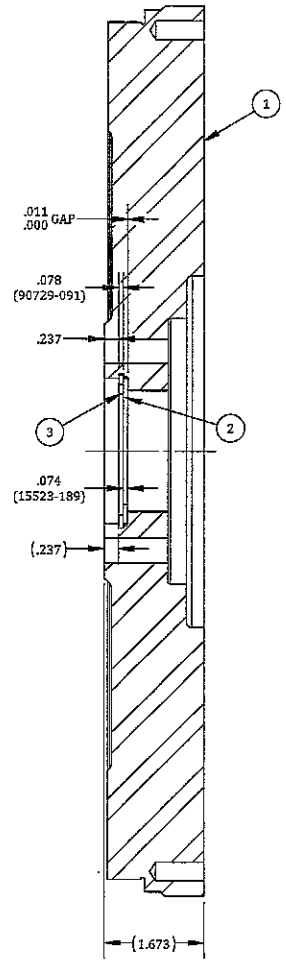

SECTION A-A

ITEM NO.	PART NUMBER	DESCRIPTION	QTY.
3	90729-091	SNAP RING, INTERNAL, 2 7/16" BORE DIAM.	1
2	15523-189	FLYWHEEL SPACER RING	1
1	15523-188	FLYWHEEL	1

UNLESS OTHERWISE SPECIFIED DIMENSIONS ARE IN INCHES

TOLERANCES

FRACTIONS	DECIMALS	ANGLES
± 1/32"	.XX ± .030	± .5°
	.XXX ± .005	

APPROVAL	
DESIGNED:	DWN
DRAWN:	DWN
CHECKED:	DWN
DATE:	12/28/2020

MATERIAL
SEE BOM

ACTUAL WEIGHT (LBS.) | SURFACE FINISH
-

DO NOT SCALE DRAWING | CAD GENERATED DRAWING DO NOT MANUALLY UPDATE

Barbco Inc.
315 Pekin Drive SE
East Canton, Ohio 44730
Manufacturing Horizontal Earth Boring Machines
Tunnel Equipment - Directional Drills - Tooling

FLYWHEEL ASSEMBLY (15523-141 REPLACEMENT)

THIRD ANGLE PROJECTION | SIZE B | DWG. NO. 15523-190 | REV. -

SCALE: 1:2 | CAD FILE: 15523-190 | SHEET: 1 OF 1

THIS DRAWING ANT RMATION THEREIN, FOR WHICH THERE MAY BE PATENT APPLICATIONS PENDING, ARE THE PROPRIETARY PROPERTY OF BARBCO INC. ANY COPY OF THE DRAWING IS ISSUED ONLY BY C F A BARBCO OFFICER, SHALL BE RETAINED IN CONFIDENCE, AND SHALL NOT BE COPIED, REP D OR DISCLOSED TO OUTSIDE PARTIES, AND ONLY MAY BE USED WITH REFERENCE TO THE CONTRACT, PROPOSALS OR PRODUCTS OF BARBCO INC. NOTHING DISCLOSED IN THE DRAWING NOT PUBLICALLY AVAILABLE MAY BE USED EXCEPT WITH WRITTEN PERMISSION, AND ALL COPIES SHALL BE RETURNED UPON REQUEST.

REVISIONS			
REV.	DESCRIPTION	DATE	APPROVED
A	REPLACED 90289-023 W/ 90289-024; REVISED 15529-507	10/2/2019	SR
B	REVISED 15529-507	7/20/2020	RLW

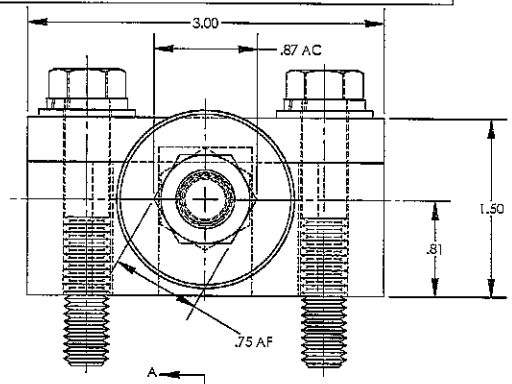

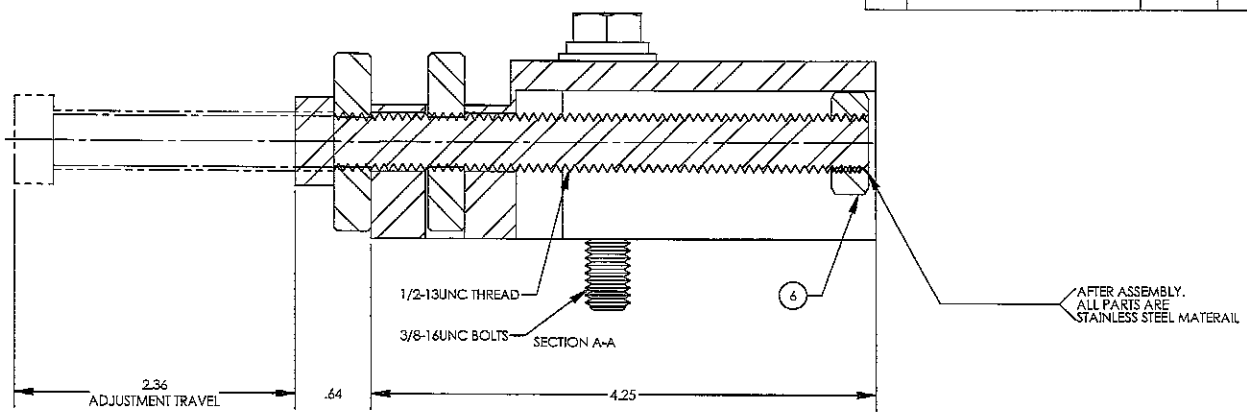

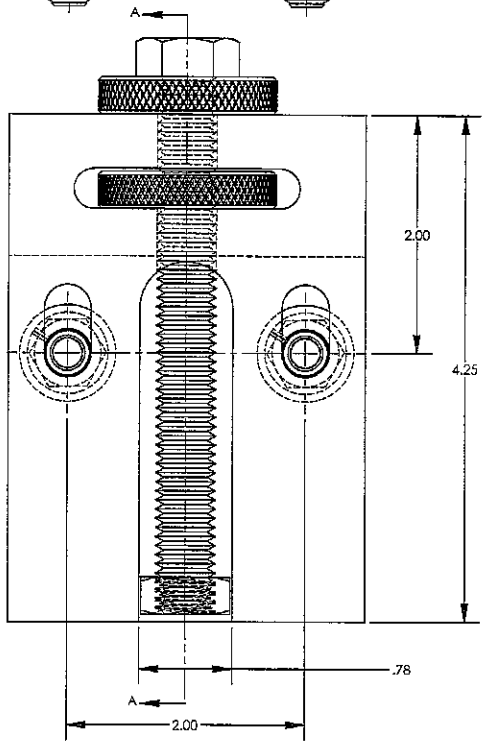

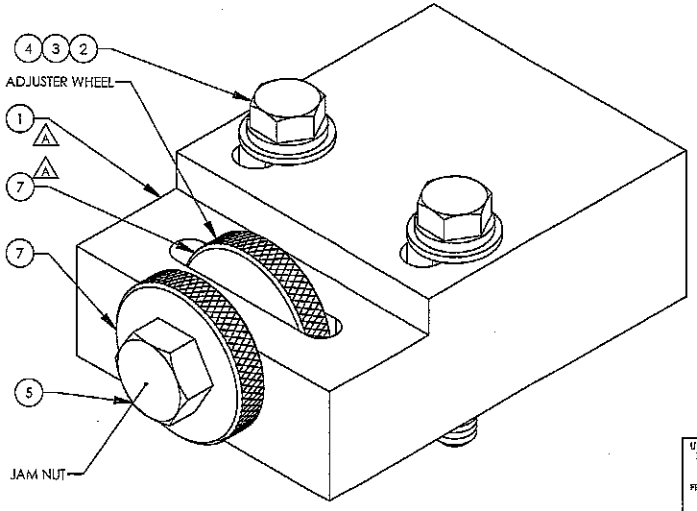

ITEM NO.	PART NUMBER	DESCRIPTION	QTY.
7	90289-024	SS KNURLED KNOB, 1/2-13UNC THRU	2
6	90283-009	SS THIN HEX NUT, 1/2-13UNC	1
5	90280-015	SS CAP SCREW, 1/2-13UNC x 4 1/2" LONG	1
4	90242-002	FLAT WASHER, 3/8" USS GR8 ZP	2
3	90242-001	LOCK WASHER, 3/8" REG, ZP	2
2	90240-018	HEX HEAD SCREW, 3/8-16UNC, 2 1/4" LG., GR8	2
1	15529-507	THRUST HANDLE LIMIT ASSEMBLY BLOCK	1

UNLESS OTHERWISE SPECIFIED DIMENSIONS ARE IN INCHES

TOLERANCES

FRACTIONS	DECIMALS	ANGLES
1/32"	.XX .030	.5
	.XXX .005	

APPROVAL	
DESIGNED:	
DRAWN:	DWN
CHECKED:	-
DATE:	09/19/2019

MATERIAL: SEE BOM

ACTUAL WEIGHT (LBS.): 4.49

SURFACE FINISH: -

DO NOT SCALE DRAWING

CAD GENERATED DRAWING DO NOT MANUALLY UPDATE

Barbco Inc.
315 Pekin Drive SE
East Canton, Ohio 44730
Manufacturing Horizontal Earth Boring Machines
Tunnel Equipment - Directional Drills - Tooling

THRUST HANDLE LIMITER ASSEMBLY

-

ABM'S, T4

THIRD ANGLE PROJECTION

SIZE: B | DWG. NO. 15529-069 | REV. B

SCALE: 1:1 | CAD FILE: 15529-069 | SHEET: 1 OF 1

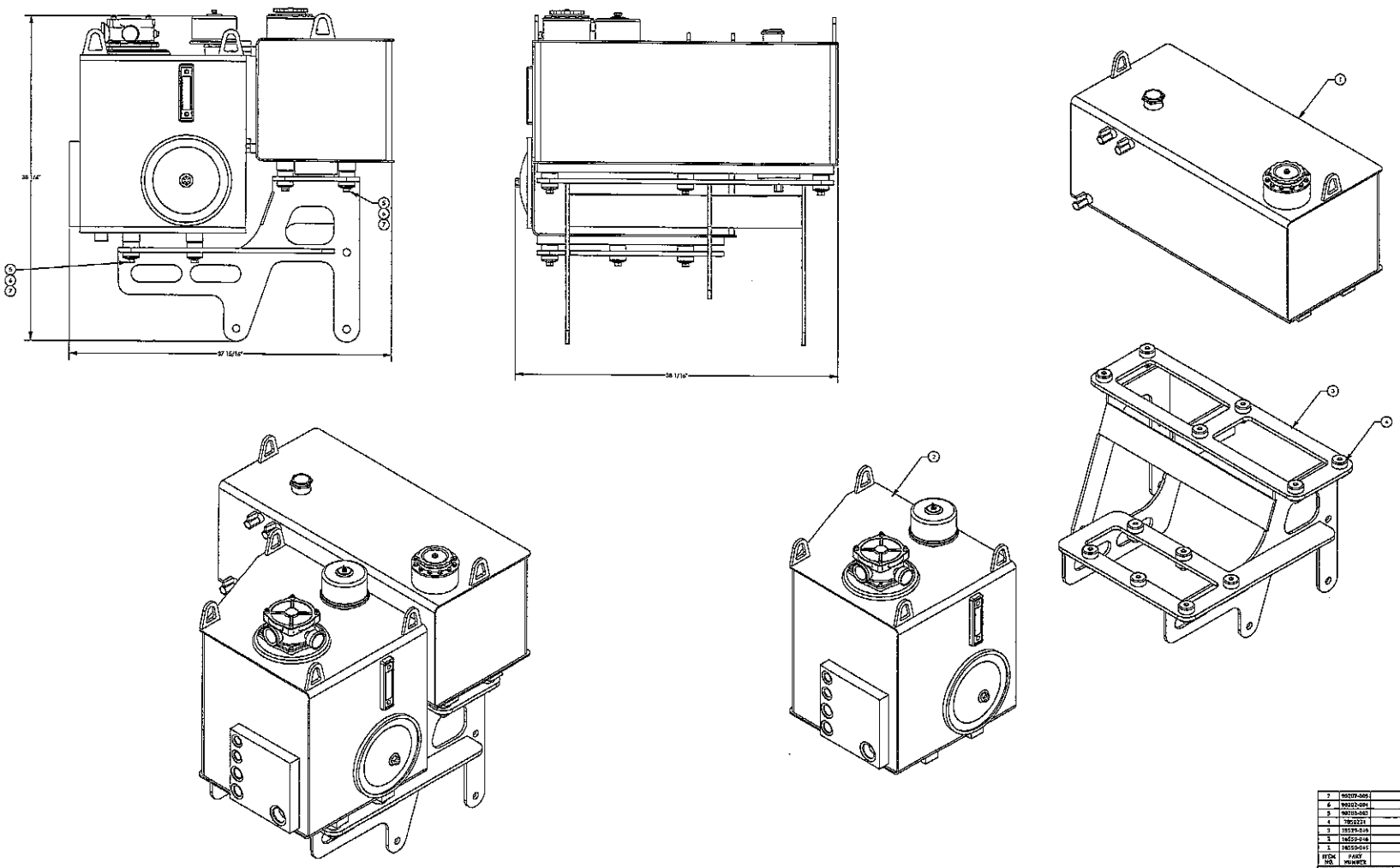

ITEM NO.	PART NUMBER	DESCRIPTION	QTY.
7	90207-005	FLAT WASHER, 1/2" SSS CRS ZP	12
6	90202-004	LOCK WASHER, 1/2" REC ZP	12
5	90200-003	HEX HEAD SCREW, 1/2-13UNC, 2-1/4" LG. GRE	12
4	7850231	RUBBER ISOLATOR	12
3	16550-016	TANK/AXIS, SUPPORT WELDMENT	1
2	16550-046	HYDRAULIC RES. ASSEMBLY	1
1	16550-045	FUEL TANK ASSEMBLY	1

UNLESS OTHERWISE SPECIFIED DIMENSIONS ARE IN INCHES
TOLERANCES
FRACTIONS ± 1/32" DECIMALS ANGLES ± 1/2° .XX ± .005 .XXX ± .005
MATERIAL SEE ITEM
DECIMAL WEIGHT (LBS.)
DO NOT SCALE DRAWING

APPROVAL
DRAWN: DWN
CHECKED: DWN
DATE: 11/20/1990

Barbco Inc.
Manufacturing Horizontal Bank Boring Mechanics
Tunnel Equipment • Directional Drills • Tooling
395 Pierce Drive SE
East Canton, Ohio 44730

TANK/RESERVOIR ASSEMBLY
48-950 ABM T4

SIZE D
16550-044
SCALE 1/4
SHEET 1 OF 1

THIS DRAWING AND [illegible] MATION THEREIN, FOR WHICH THERE MAY BE PATENT APPLICATIONS PENDING, ARE THE [illegible] PROPRIETARY PROPERTY OF BARBCO INC. ANY COPY OF THE DRAWING IS ISSUED ONLY BY [illegible] A BARBCO OFFICER, SHALL BE RETAINED IN CONFIDENCE, AND SHALL NOT BE COPIED, REPRO[illegible] OR DISCLOSED TO OUTSIDE PARTIES, AND ONLY MAY BE USED WITH REFERENCE TO THE CONTRACT, PROPOSALS OR PRODUCTS OF BARBCO INC. NOTHING DISCLOSED IN THE DRAWING NOT PUBLICALLY AVAILABLE MAY BE USED EXCEPT WITH WRITTEN PERMISSION, AND ALL COPIES SHALL BE RETURNED UPON REQUEST.

REVISIONS

REV.	DESCRIPTION	DATE	APPROVED
A	ADDED 15526-117 TO ASSEMBLY	3/15/2019	DWN
B	REPLACED 15526-117 WITH 15526-118. UPDATED MACHINES LIFT SLING IS APPLIED TOO	8/19/2021	MRH

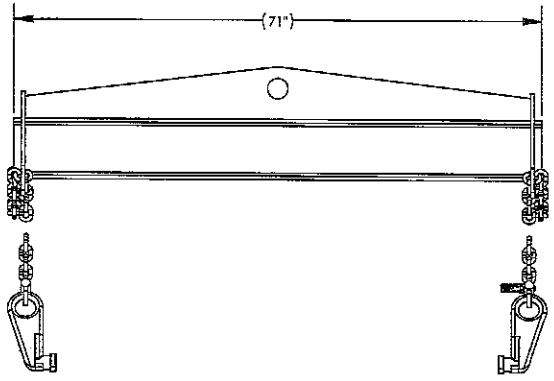

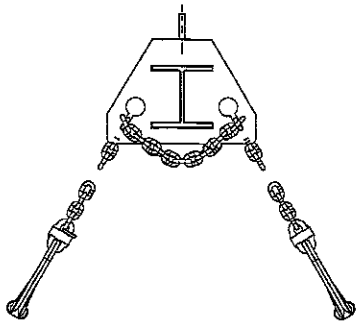

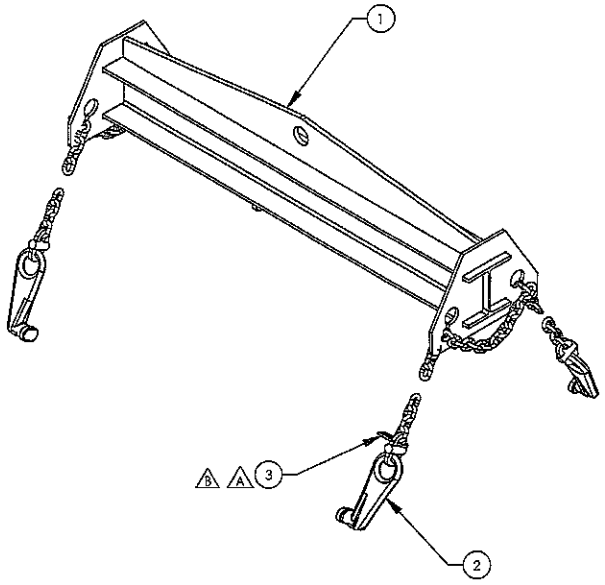

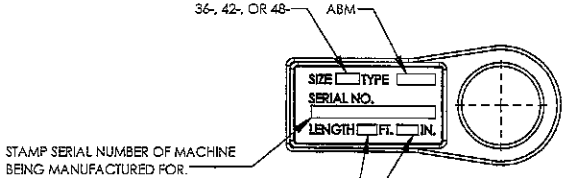

B

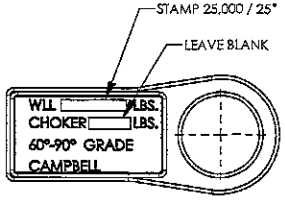

STAMP SLING TAG FOR TIER 4 36-500, 36-650, 42-650, & 48-950 ABM AS SHOWN B

B

ITEM NO.	PART NUMBER	DESCRIPTION	QTY.
3	15526-118	LIFT SLING TAG	1
2	15526-012	LIFT SLING CHAIN ASSEMBLY, 36 & 48 ABM'S	2
1	15526-011	LIFT SLING WELDMENT, 36 & 48 ABM'S	1

UNLESS OTHERWISE SPECIFIED DIMENSIONS ARE IN INCHES

TOLERANCES
FRACTIONS ± 1/32" DECIMALS .XX ± .030 .XXX ± .005 ANGLES ± .5°

APPROVAL
DESIGNED:
DRAWN: KEW
CHECKED: -
DATE: 03/20/2018

MATERIAL
SEE BOM

ACTUAL WEIGHT (LBS.) 407.07

SURFACE FINISH -

DO NOT SCALE DRAWING

CAD GENERATED DRAWING DO NOT MANUALLY UPDATE

Barbco Inc.
Manufacturing Horizontal Earth Boring Machines
Tunnel Equipment - Directional Drills - Tooling
315 Pekin Drive SE
East Canton, Ohio 44730

LIFT SLING ASSEMBLY, 36 & 48 ABM'S
-
-

THIRD ANGLE PROJECTION

SIZE B DWG. NO. 15526-010 REV. B

SCALE 2:16 CAD FILE: 15526-010 SHEET: 1 OF 1

THIS DRAWING AND [illegible] ATION THEREIN, FOR WHICH THERE MAY BE PATENT APPLICATIONS PENDING, ARE THE [illegible] PROPRIETARY PROPERTY OF BARBCO INC. ANY COPY OF THE DRAWING IS ISSUED ONLY BY CO[illegible] A BARBCO OFFICER, SHALL BE RETAINED IN CONFIDENCE, AND SHALL NOT BE COPIED, REPRO[illegible] OR DISCLOSED TO OUTSIDE PARTIES, AND ONLY MAY BE USED WITH REFERENCE TO THE CONTRACT, PROPOSALS OR PRODUCTS OF BARBCO INC. NOTHING DISCLOSED IN THE DRAWING NOT PUBLICALLY AVAILABLE MAY BE USED EXCEPT WITH WRITTEN PERMISSION, AND ALL COPIES SHALL BE RETURNED UPON REQUEST.

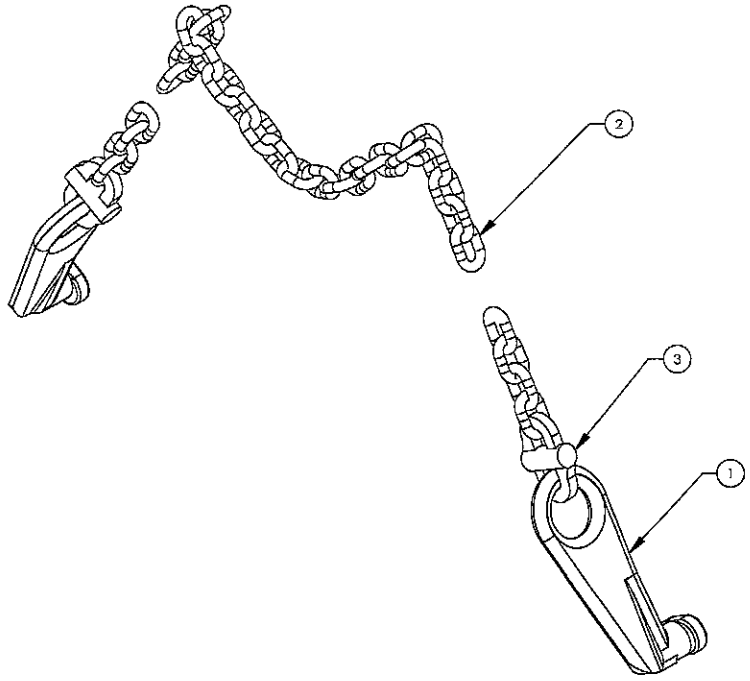

ITEM NO.	PART NUMBER	DESCRIPTION	QTY.
1	15526-109	CONTAINER LIFTING HOOK	2
2	15526-113	CHAIN, 14' LONG, 36 & 48 ABM'S, 1/2-GR100	1
3	15526-116	CHAIN COUPLING, 1/2" CHAIN, GRADE 100	2

UNLESS OTHERWISE SPECIFIED DIMENSIONS ARE IN INCHES
TOLERANCES
FRACTIONS ± 1/32" DECIMALS .XX ± .030 .XXX ± .005 ANGLES ± .5°

APPROVAL
DESIGNED:
DRAWN: KEW
CHECKED: -
DATE: 03/20/2018

MATERIAL
SEE BOM

ACTUAL WEIGHT (LBS.) 37.11
SURFACE FINISH -

DO NOT SCALE DRAWING
CAD GENERATED DRAWING DO NOT MANUALLY UPDATE

Barbco Inc.
315 Pekin Drive SE
East Canton, Ohio 44730
Manufacturing Horizontal Earth Boring Machines
Tunnel Equipment - Directional Drills - Tooling

LIFT SLING CHAIN ASSEMBLY, 36 & 48 ABM'S
-
-

THIRD ANGLE PROJECTION
SIZE B
DWG. NO. 15526-012
REV. —
SCALE: 1:6
CAD FILE: 15526-012
SHEET: 1 OF 1